RELEASE FOR PRODUCTION | DATE

NOTE: Ⓗ
THIS PRODUCT IS DESIGNED AND MFRG. TO MEET CLASSIFICATION NO. 37601322B, EN1125 STANDARD.

Ⓗ *'THE SAFETY FEATURES OF THIS PRODUCT ARE ESSENTIAL TO IT'S COMPLIANCE WITH EN 1125. NO MODIFICATION OF ANY KIND, OTHER THAN THOSE DESCRIBED IN THESE INSTRUCTIONS, ARE PERMITTED'.*

Ⓗ RECOMMENDATIONS FOR MAINTENANCE:

IT IS RECOMMENDED THAT THE FOLLOWING ROUTINE MAINTENANCE CHECKS SHOULD BE TAKEN AT INTERVALS OF NOT MORE THAN ONE MONTH BY THE OCCUPIER OR HIS APPROVED REPRESENTATIVE:

A) INSPECT AND OPERATE THE PANIC DEVICE TO ENSURE THAT ALL COMPONENTS ARE IN A SATISFACTORY WORKING CONDITION;

B) ENSURE THAT THE KEEPER(S) IS (ARE) FREE FROM OBSTRUCTION.

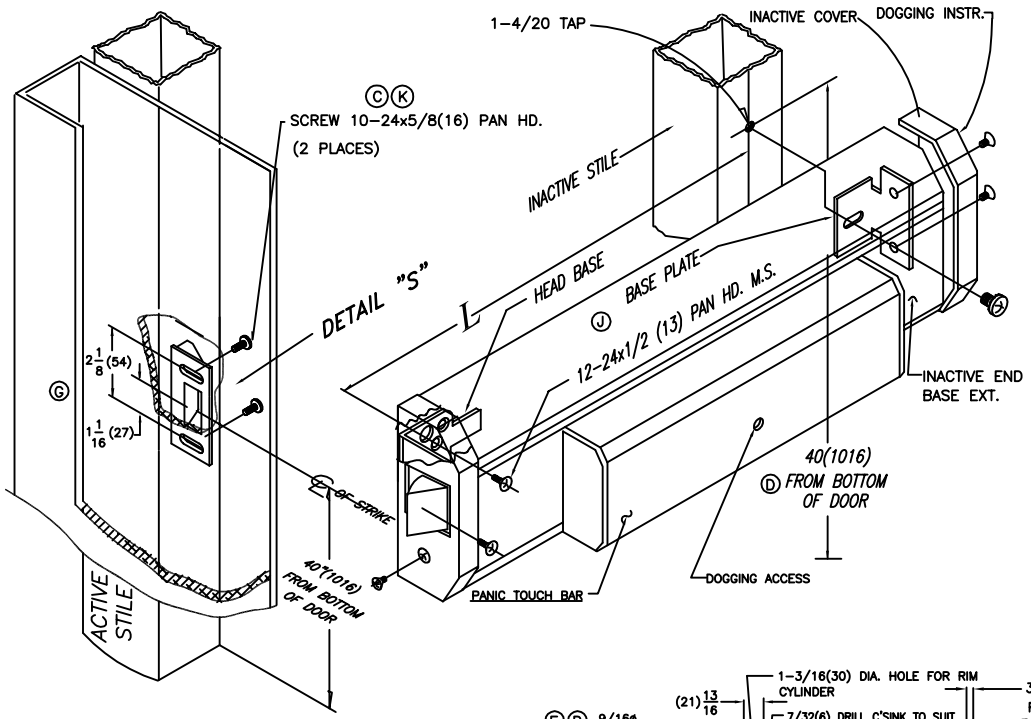

FUNCTIONAL CYLINDERS	A	DOOR OPENING	L
ILCO LOCKWOOD YALE CORBIN SCHLAGE RUSSWIN WELCH KEIL	1/4" (6)	36"(914)	33"(838)
		48"(1219)	45"(1143)
SARGENT	3/8" (10)		

MODEL 1295

MOUNTING INSTRUCTIONS:

1. *PREPARE LOCK STILE PER TEMPLATE NO. 10-935 DRILL CYLINDER MOUNTING HOLES IF REQUIRED.*
2. *LOCATE CENTERLINE OF CYLINDER ON EXTERIOR OF DOOR AND DRILL IF REQUIRED.*
3. *TRIM TAIL PIECE TO FIT INTO PANIC DRIVE BUSHING ASSEMBLY.*
4. *MOUNT CYLINDER AND SECURE WITH MOUNTING SCREWS (SUPPLIED BY LOCK MFG.)IF TRIM IS REQ'D PREP. PER 10-997*
6. *LOCATE MOUNTING HOLE ON INACTIVE STILE DRILL & TAP 1/4-20 THDS. 40"(1016) FROM BTM. OF DOOR .*
7. ***PANIC ATTACHMENT***
   REMOVE FRONT AND REAR END BASE COVERS BY RELEASING 6-32 x 3/16(5) FLAT HD. SCREWS. SECURE ACTIVE END OF PANIC BY INSTALLING 2 Ⓙ EACH 12-24x1/2 (13) PAN HD.M.S. SECURE INACTIVE END WITH SINGLE 1/4-20x1/2(13) ROUND HD. M.S. (PHIL.) WITH SEMS THROUGH INACTIVE BASE PLATE. PROCEED BY RE-INSTALLING BASE COVERS ON EACH END OF PANIC BASE.
8. *TO INSTALL STRIKE LOCATE 10-24 TAPS ON ACTIVE STILE (2 PLACES).*
9. *MOUNT AND SECURE STRIKE. (REF. DETAIL "S")*
10. *CHECK OPERATION OF ALL PARTS INCLUDING CYLINDER IF BEING USED TO ASSURE PROPER OPERATION.*

DOGGING INSTRUCTIONS:

TO DOG- INSERT HEX. KEY TURN CLOCKWISE UNTIL IT STOPS, FULLY DEPRESS TOUCH BAR THEN RELEASE.

TO UNDOG-INSERT HEX KEY TURN CLOCKWISE UNTIL IT STOPS, TOUCH BAR WILL RELEASE.

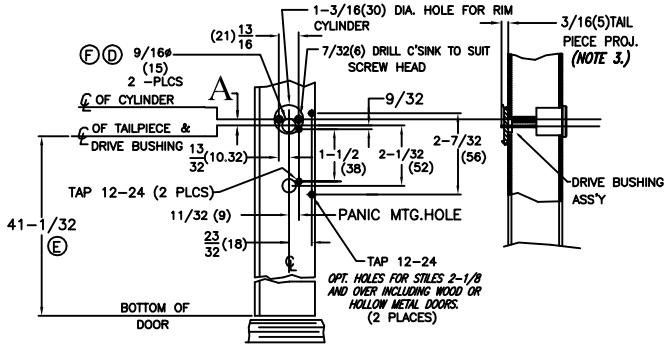

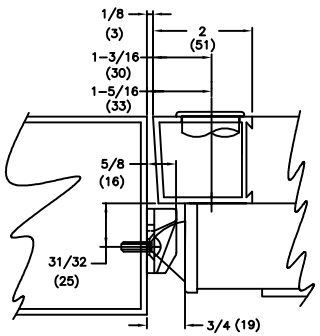

OFFSET HUNG INST.

K 1.19.08	PAN HEAD WAS OVAL	ECN1999	RM
J 1.24.06	12-24 PAN HD WAS FLAT	ECN1981	RM
H 5.26.05	ADD EN1125 SPECIFICATIONS (STANDARDS)	ECN1841	RM
G 6.25.03	2-1/8 WAS 1-13/16 ECN1625		RM
F 06/21/01	ADD 41-1/32 9/16ø WAS 19/32ø DIM	ECN1502	RM
E 06/21/01	ADD 41-1/32 DIM	ECN1501	RM
D 05/31/00	40" WAS 37 ADD 2nd 19/32" HOLE	ECN1377	RM
C 04/17/00	12-24 CALLOUT WAS 10-32	ECN1366	RM
B 7/7/99	12-24 TAP WAS 8-32 ECN1267		RM

DIMENSIONAL TOLERANCES UNLESS OTHERWISE SPECIFIED	APPROVALS	DATE
DECIMAL DIMENSIONS .XX ± .010	APPROVED	
DECIMAL DIMENSIONS .XXX ± .005	CHECKED	
ANGULAR ± ° FRACTIONAL ± 1/64	DRAWN RM	5/5/99

jackson CORPORATION®
3447 UNION PACIFIC AVE.
LOS ANGELES, CALIF. 90023

FILE NO. 10-936	MATERIAL NONE	SCALE NONE	INSTALLATION GUIDE 1295 RIM DEVICE "C" TYPE STRIKE
NEXT ASSY. 1295-KITS	FINISH NONE		SHEET 1 OF 1 SHEETS
QTY. USED 1	HEAT TREAT		DWG. NO. 10-936 REV. K

RELEASE FOR PRODUCTION	DATE

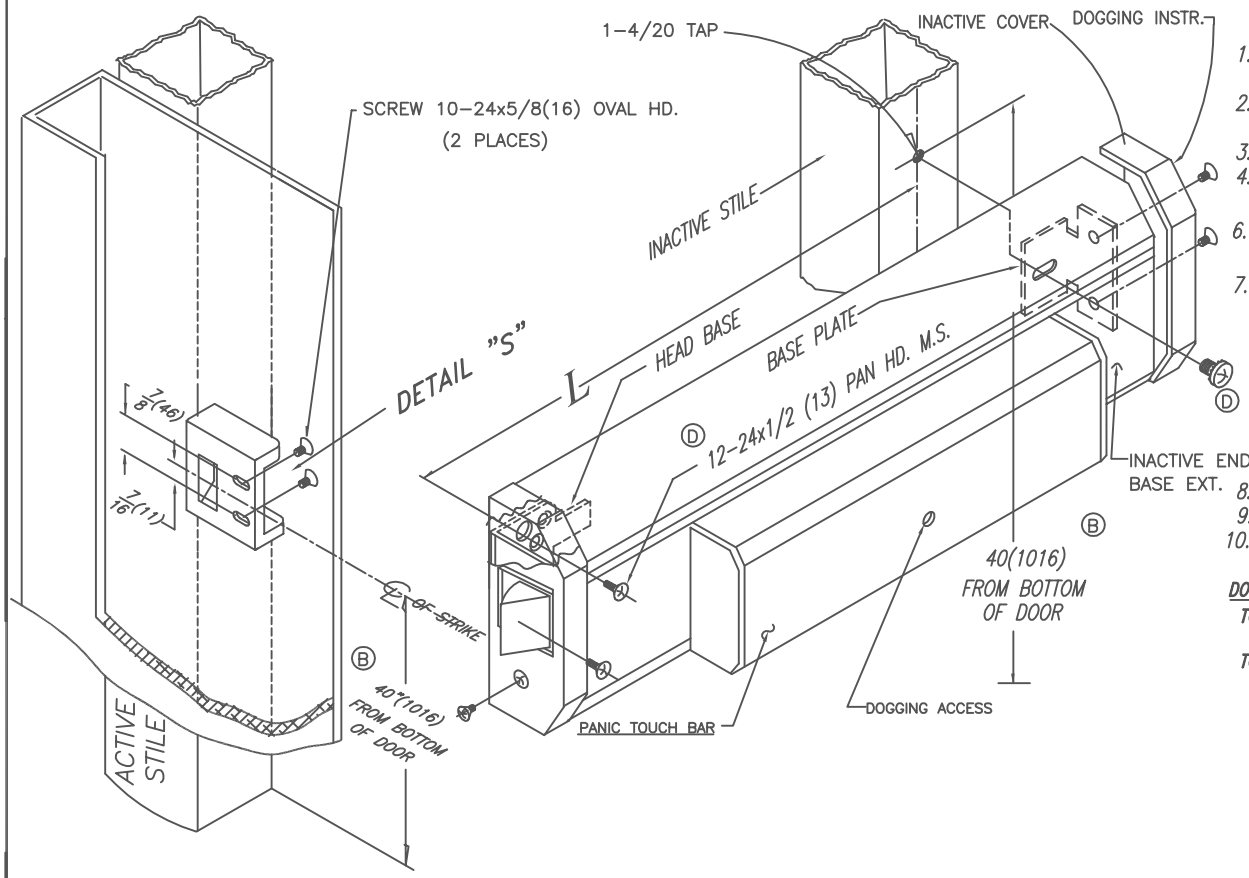

MOUNTING INSTRUCTIONS:

1. PREPARE LOCK STILE PER TEMPLATE NO. 10-935 DRILL CYLINDER MOUNTING HOLES IF REQUIRED.
2. LOCATE CENTERLINE OF CYLINDER ON EXTERIOR OF DOOR AND DRILL IF REQUIRED.
3. TRIM TAIL PIECE TO FIT INTO PANIC DRIVE BUSHING ASSEMBLY.
4. MOUNT CYLINDER AND SECURE WITH MOUNTING SCREWS (SUPPLIED BY LOCK MFG.)IF TRIM IS REQ'D PREP. PER 10-997
6. LOCATE MOUNTING HOLE ON INACTIVE STILE DRILL & TAP 1/4-20 THDS. 40"(1016) FROM BTM. OF DOOR .
7. **PANIC ATTACHMENT**

   REMOVE FRONT AND REAR END BASE COVERS BY RELEASING 6-32 x 3/16(5) FLAT HD. SCREWS. SECURE ACTIVE END OF PANIC BY INSTALLING 2 EACH 12-24x1/2(13) PAN HD.M.S.

   SECURE INACTIVE END WITH SINGLE 1/4-20x1/2(13) ROUND HD. M.S. (PHIL.) WITH SEMS THROUGH INACTIVE BASE PLATE. PROCEED BY RE-INSTALLING BASE COVERS ON EACH END OF PANIC BASE.
8. TO INSTALL STRIKE LOCATE 10-24 TAPS ON ACTIVE STILE (2 PLACES).
9. MOUNT AND SECURE STRIKE. (REF. DETAIL "S")
10. CHECK OPERATION OF ALL PARTS INCLUDING CYLINDER IF BEING USED TO ASSURE PROPER OPERATION.

DOGGING INSTRUCTIONS:

TO DOG- INSERT HEX. KEY TURN CLOCKWISE UNTIL IT STOPS, FULLY DEPRESS TOUCH BAR THEN RELEASE.

TO UNDOG- INSERT HEX KEY TURN CLOCKWISE UNTIL IT STOPS, TOUCH BAR WILL RELEASE.

FUNCTIONAL CYLINDERS	A	DOOR OPENING	L
ILCO LOCKWOOD YALE CORBIN SCHLAGE RUSSWIN WELCH KEIL	1/4" (6)	36"(914)	33"(838)
		42"(1067)	39"(991)
		48"(1219)	45"(1143)
SARGENT	3/8" (10)		

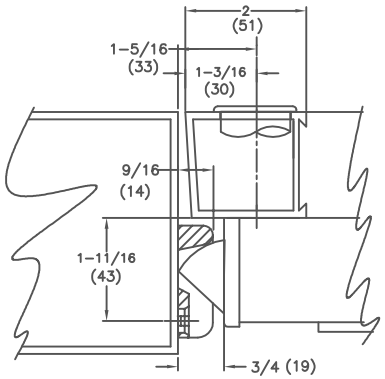

OFFSET HUNG INST.

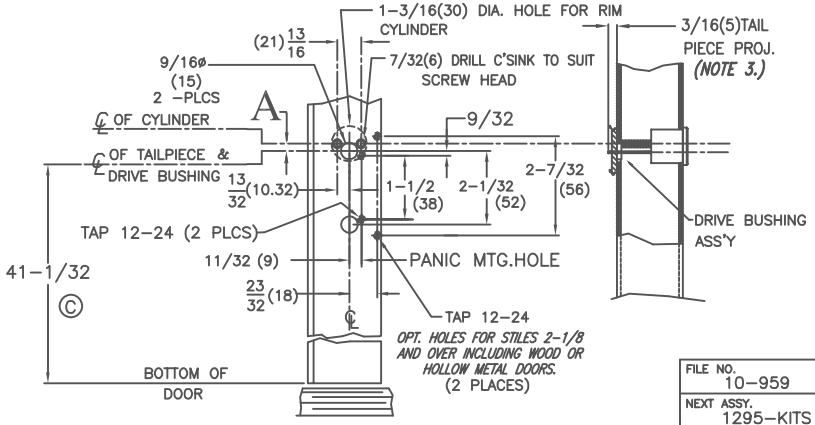

D 1.24.06 12-24 PAN HD WAS FLAT		ECN1981	RM
C 06/21/01 ADD 41-1/32 9/16ø WAS 19/32ø DIM		ECN1502	RM
B 05/31/00 40" WAS 37 ADD TRIM INFO.		ECN1337	RM

DIMENSIONAL TOLERANCES UNLESS OTHERWISE SPECIFIED	APPROVALS	DATE
DECIMAL DIMENSIONS .XX ± .010	APPROVED	
DECIMAL DIMENSIONS .XXX ± .005	CHECKED	
ANGULAR ± ° FRACTIONAL ± 1/64	DRAWN RM	04/14/00

jackson CORPORATION
3447 UNION PACIFIC AVE.
LOS ANGELES, CALIF. 90023

FILE NO. 10-959	MATERIAL NONE	SCALE NONE	
NEXT ASSY. 1295-KITS	FINISH NONE	INSTALLATION GUIDE 1295 RIM DEVICE "S" TYPE STRIKE	SHEET 1 OF 1 SHEETS
QTY. USED 1	HEAT TREAT		DWG. NO. 10-959 REV. D

RELEASE FOR PRODUCTION	DATE

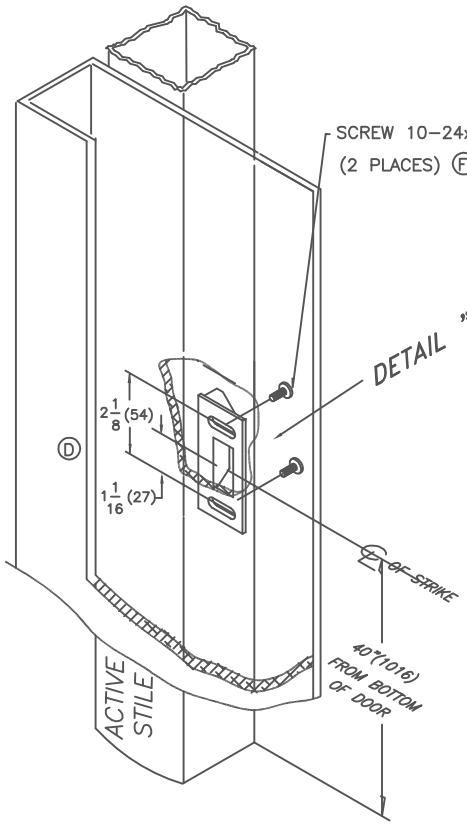

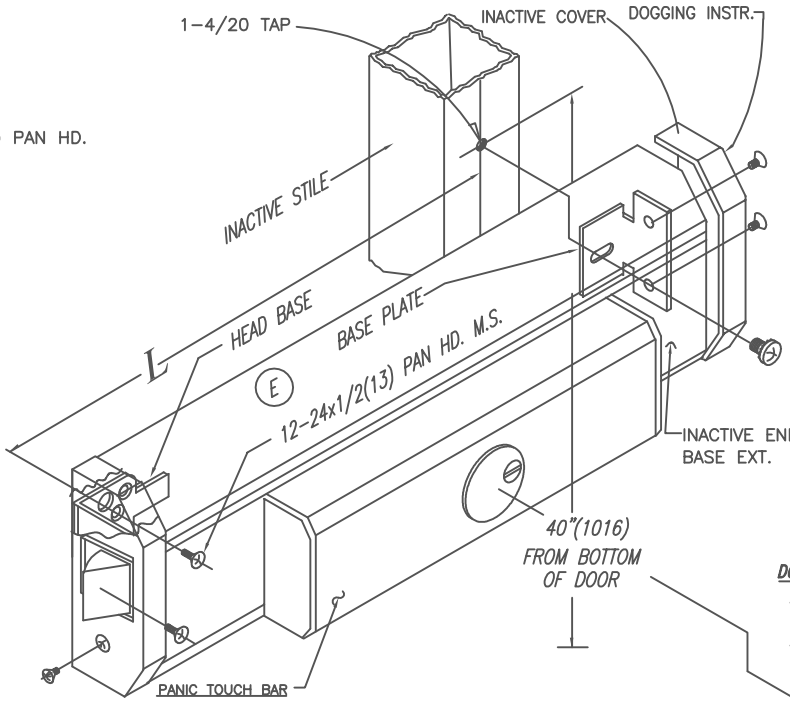

MOUNTING INSTRUCTIONS:

1. PREPARE LOCK STILE PER TEMPLATE NO. 10-935 DRILL CYLINDER MOUNTING HOLES IF REQUIRED.
2. LOCATE CENTERLINE OF CYLINDER ON EXTERIOR OF DOOR AND DRILL IF REQUIRED.
3. TRIM TAIL PIECE TO FIT INTO PANIC DRIVE BUSHING ASSEMBLY.
4. MOUNT CYLINDER AND SECURE WITH MOUNTING SCREWS (SUPPLIED BY LOCK MFG.) IF TRIM IS REQ'D PEPARE PER 10-997 TEMPLATE. FOR INSTALLMENT OF PUSHBAR MORTISE "CYLINDER DOGGING" SEE **(DWG. 10-979 RE-KEY/CYL. INSTALLMENT INSTRUCTIONS.)**
6. LOCATE MOUNTING HOLE ON INACTIVE STILE DRILL & TAP 1/4-20 THDS. 40"(1016) FROM BTM. OF DOOR.
7. **PANIC ATTACHMENT**

   REMOVE FRONT AND REAR END BASE COVERS BY RELEASING 6-32 x 3/16(5) FLAT HD. SCREWS. SECURE ACTIVE END OF PANIC BY INSTALLING 2 (E) EACH 12-24x1/2(13) PAN HD.M.S.
   SECURE INACTIVE END WITH SINGLE 1/4-20x1/2(13) ROUND HD. M.S. (PHIL.) WITH SEMS THROUGH INACTIVE BASE PLATE. PROCEED BY RE-INSTALLING BASE COVERS ON EACH END OF PANIC BASE.
8. TO INSTALL STRIKE LOCATE 10-24 TAPS ON ACTIVE STILE (2 PLACES).
9. MOUNT AND SECURE STRIKE. (REF. DETAIL "S")
10. CHECK OPERATION OF ALL PARTS INCLUDING CYLINDER IF BEING USED TO ASSURE PROPER OPERATION.

DOGGING INSTRUCTIONS:

TO DOG- DEPRESS BAR,INSERT KEY AND TURN CCW UNTIL IT STOPS,RETURN KEY TO ORIGINAL POSITION THEN REMOVE.

TO UNDOG- INSERT KEY AND TURN CW UNTIL IT STOPS, RETURN KEY TO ORIGINAL POSITION THEN REMOVE.

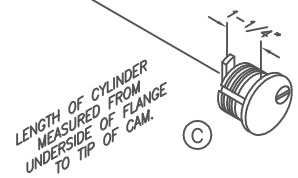

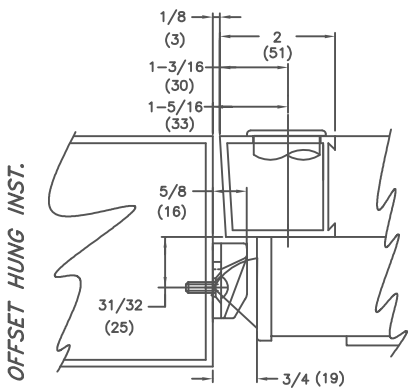

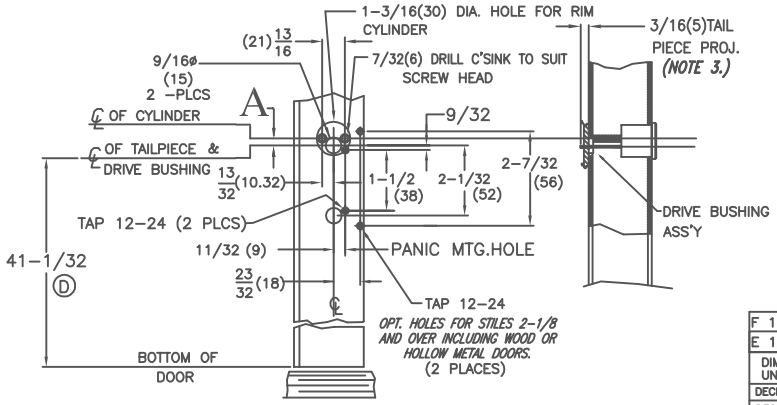

FUNCTIONAL CYLINDERS	A	DOOR OPENING	L
ILCO LOCKWOOD YALE CORBIN SCHLAGE RUSSWIN WELCH KEIL	1/4" (6)	36"(914)	33"(838)
		48"(1219)	45"(1143)
SARGENT	3/8" (10)		

MODEL 1295C

F 1.19.08 10-24 PAN HD. SCREW WAS OVAL	ECN1999	RM
E 1.23.06 12-24 PAN HD. WAS FLAT HD.	ECN1891	RM

DIMENSIONAL TOLERANCES UNLESS OTHERWISE SPECIFIED	APPROVALS	DATE
DECIMAL DIMENSIONS .XX ± .010	APPROVED	
DECIMAL DIMENSIONS .XXX ± .005	CHECKED	
ANGULAR ± ° FRACTIONAL ± 1/64	DRAWN RM	04/03/00

jackson CORPORATION
3447 UNION PACIFIC AVE.
LOS ANGELES, CALIF. 90023

FILE NO. 10-982	MATERIAL NONE	SCALE NONE
NEXT ASSY. 1295C-KITS	FINISH NONE	INSTALLATION GUIDE 1295C RIM DEVICE "C" TYPE STRIKE
QTY. USED 1	HEAT TREAT	

SHEET 1 OF 1 SHEETS
DWG. NO. 10-982 REV. F

RELEASE FOR PRODUCTION	DATE

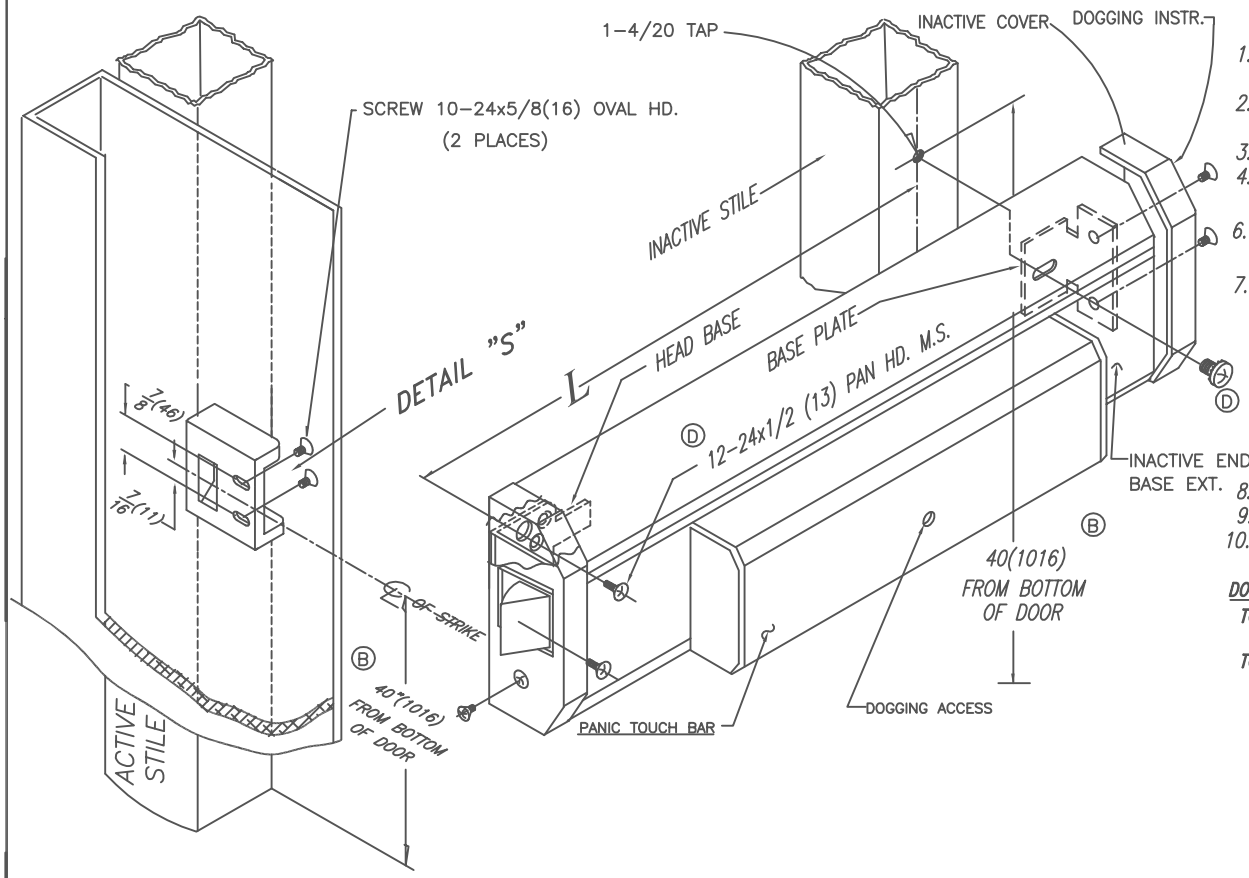

MOUNTING INSTRUCTIONS:

1. PREPARE LOCK STILE PER TEMPLATE NO. 10-935 DRILL CYLINDER MOUNTING HOLES IF REQUIRED.
2. LOCATE CENTERLINE OF CYLINDER ON EXTERIOR OF DOOR AND DRILL IF REQUIRED.
3. TRIM TAIL PIECE TO FIT INTO PANIC DRIVE BUSHING ASSEMBLY.
4. MOUNT CYLINDER AND SECURE WITH MOUNTING SCREWS (SUPPLIED BY LOCK MFG.)IF TRIM IS REQ'D PREP. PER 10-997
6. LOCATE MOUNTING HOLE ON INACTIVE STILE DRILL & TAP 1/4-20 THDS. 40"(1016) FROM BTM. OF DOOR .
7. **PANIC ATTACHMENT**

   REMOVE FRONT AND REAR END BASE COVERS BY RELEASING 6-32 x 3/16(5) FLAT HD. SCREWS. SECURE ACTIVE END OF PANIC BY INSTALLING 2 EACH 12-24x1/2(13) PAN HD.M.S.

   SECURE INACTIVE END WITH SINGLE 1/4-20x1/2(13) ROUND HD. M.S. (PHIL.) WITH SEMS THROUGH INACTIVE BASE PLATE. PROCEED BY RE-INSTALLING BASE COVERS ON EACH END OF PANIC BASE.
8. TO INSTALL STRIKE LOCATE 10-24 TAPS ON ACTIVE STILE (2 PLACES).
9. MOUNT AND SECURE STRIKE. (REF. DETAIL "S")
10. CHECK OPERATION OF ALL PARTS INCLUDING CYLINDER IF BEING USED TO ASSURE PROPER OPERATION.

DOGGING INSTRUCTIONS:

TO DOG- INSERT HEX. KEY TURN CLOCKWISE UNTIL IT STOPS, FULLY DEPRESS TOUCH BAR THEN RELEASE.

TO UNDOG- INSERT HEX KEY TURN CLOCKWISE UNTIL IT STOPS, TOUCH BAR WILL RELEASE.

FUNCTIONAL CYLINDERS	A	DOOR OPENING	L
ILCO LOCKWOOD YALE CORBIN SCHLAGE RUSSWIN WELCH KEIL	1/4" (6)	36"(914)	33"(838)
		42"(1067)	39"(991)
		48"(1219)	45"(1143)
SARGENT	3/8" (10)		

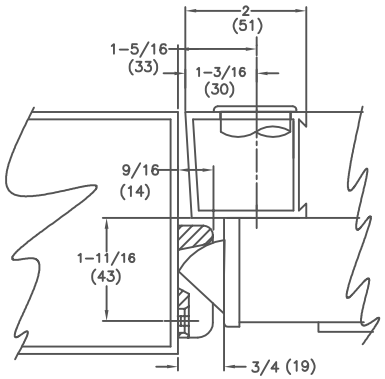

OFFSET HUNG INST.

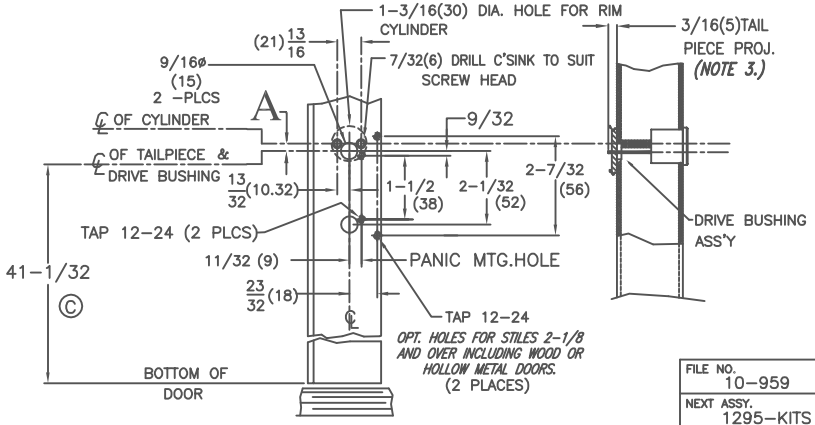

D 1.24.06 12-24 PAN HD WAS FLAT		ECN1981	RM
C 06/21/01 ADD 41-1/32 9/16ø WAS 19/32ø DIM		ECN1502	RM
B 05/31/00 40" WAS 37 ADD TRIM INFO.		ECN1337	RM

DIMENSIONAL TOLERANCES UNLESS OTHERWISE SPECIFIED	APPROVALS	DATE
DECIMAL DIMENSIONS .XX ± .010	APPROVED	
DECIMAL DIMENSIONS .XXX ± .005	CHECKED	
ANGULAR ± ° FRACTIONAL ± 1/64	DRAWN RM	04/14/00

jackson CORPORATION
3447 UNION PACIFIC AVE.
LOS ANGELES, CALIF. 90023

FILE NO. 10-959	MATERIAL NONE	SCALE NONE	
NEXT ASSY. 1295-KITS	FINISH NONE	INSTALLATION GUIDE 1295 RIM DEVICE "S" TYPE STRIKE	SHEET 1 OF 1 SHEETS
QTY. USED 1	HEAT TREAT		DWG. NO. 10-959 REV. D