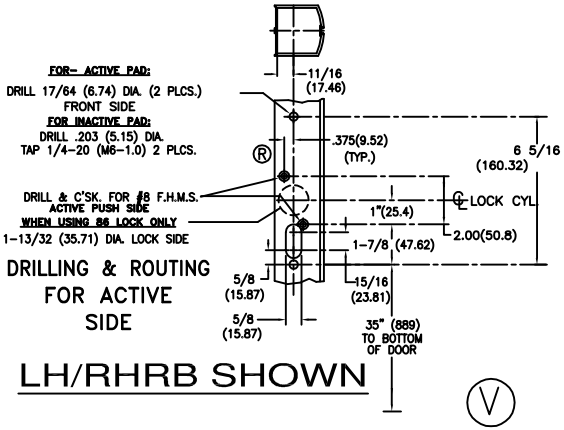

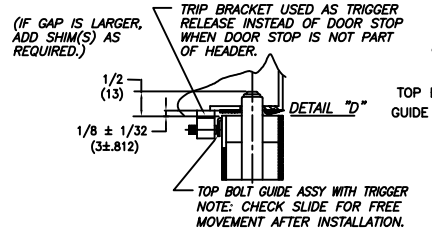

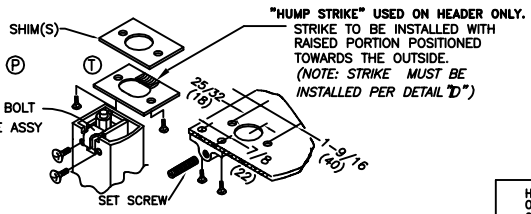

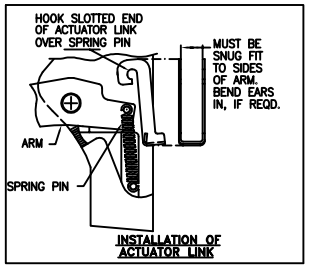

REQUIRED CYLINDER

1" MORTISE WITH CAM PROFILE AS SHOWN BELOW.

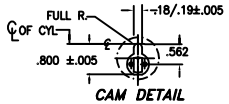

CAM DETAIL

MAKE OF CYLINDER	RECOMMENDED CAMS
YALE	YALE # 1161–L
CORBIN	MS–4800
RUSSWIN	MS–4800
SCHLAGE	SCHLAGE B–502–292
ILCO	4002–2R (LOCKWOOD)
ADAMS RITE	MS–1850
SARGENT	47–40–101

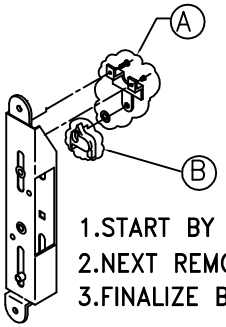

NOTE: WHEN NOT USING MORTISE CYLINDER, PROCEED WITH THE FOLLOWING:

1. START BY REMOVING BRACKET (A),
2. NEXT REMOVE DOGGING PAWL (B)
3. FINALIZE BY RE–ATTACHING BRACKET (A)

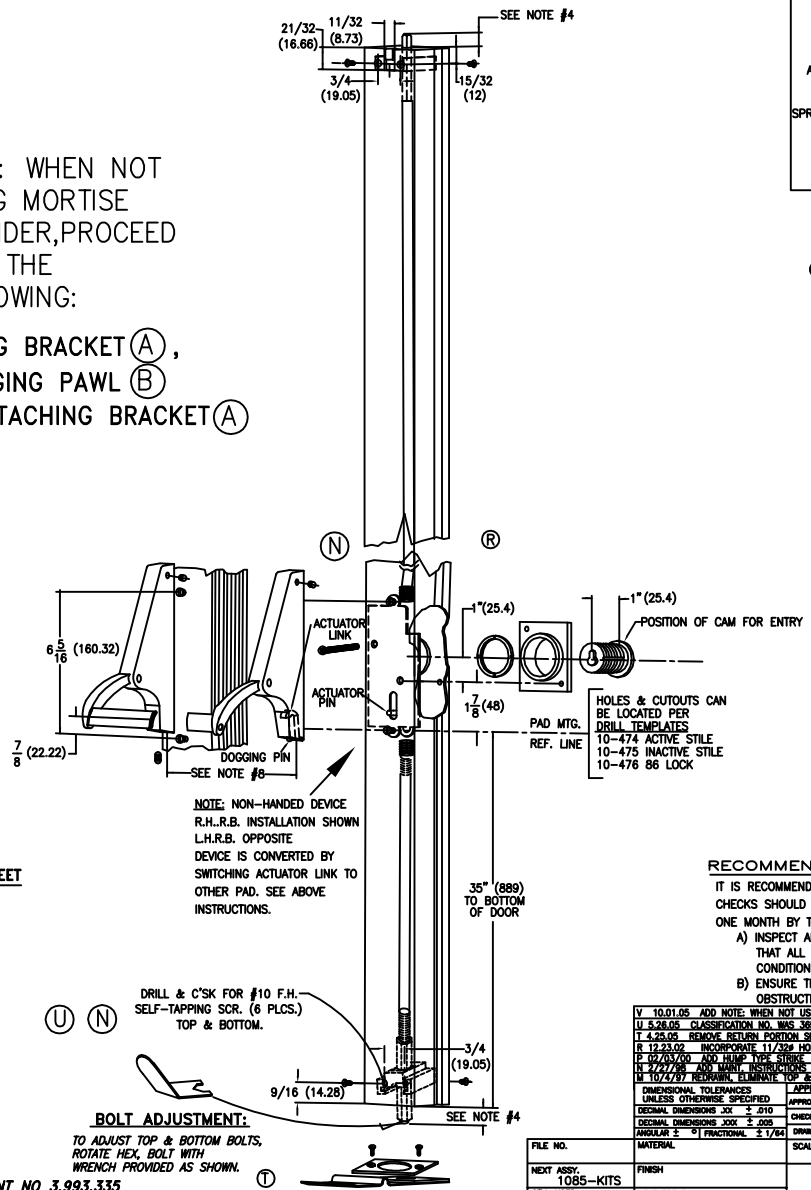

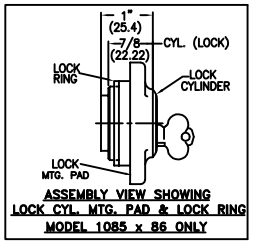

ASSEMBLY VIEW SHOWING LOCK CYL. MTG. PAD & LOCK RING MODEL 1085 x 86 ONLY

"THE SAFETY FEATURES OF THIS PRODUCT ARE ESSENTIAL TO IT'S COMPLIANCE WITH EN 1125. NO MODIFICATION OF ANY KIND, OTHER THAN THOSE DESCRIBED IN THESE INSTRUCTIONS, ARE PERMITTED".

MOUNTING INSTRUCTIONS

1. DETERMINE HAND OF DOOR, THEN PREPARE STILES PER TEMPLATES:
   10–474 DRILL TEMPLATE FOR ACTIVE STILE.
   10–475 DRILL TEMPLATE FOR INACTIVE STILE.
2. IF LOCK IS TO BE USED, PREPARE ACTIVE STILE PER TEMPLATE 10–476.
3. INSTALL ROD & CASE ASSY INTO ACTIVE STILE AND SECURE WITH TWO 1/4–20 (M6–1.0) SHOULDER STUDS. (IF USING LOCK, PERFORM INST. 5 & 6 NEXT.)
4. PLACE ACTIVE PAD OF STILE MAKING CERTAIN THAT ACTUATOR LINK IS PROPERLY ENGAGED (UNDERSIDE OF PIN) TO MECHANISM AND SECURE PAD. ADJUST BOLTS BY SCREWING IN OR OUT TILL TOP OF BOLT IS FLUSH WITH EDGE OF DOOR, WHEN THE PUSH BAR IS FULLY DEPRESSED. THEN INSTALL BOLT GUIDES WITH SIX #10 x 1/2 F.H. SELF TAPPING SCREWS.
5. INSERT LOCK CYLINDER INTO LOCK MOUNTING PAD AND SECURE WITH LOCK RING PROVIDED. MAKE SURE CYLINDER AND LOCK MOUNTING PAD ARE INSTALLED AS SHOWN. SECURE WITH 2 EA. 8–32 x 1–15/16 FHMS.

R

7. DRILL .203 (5.15) DIA. AND TAP 1/4–20 (M6–1.0) THD. (2 PLCS.) ON INACTIVE STILE AND INSTALL TWO 1/4–20 (M6–1.0) SHOULDER STUDS. MOUNT INACTIVE PAD TO STILE WITH THREE 1/4–20 (M6–1.0) SOC. SET SCREWS.
8. CUT LENGTH OF PANIC BAR BY MEASURING FROM INSIDE TO INSIDE EDGE OF MOUNTING PADS. CAUTION: BAR MUST BE CUT TO EXACT LENGTH WITHIN ±1/32 (±.787) TO WORK PROPERLY.
9. LOOSEN INACTIVE PAD, INSTALL AND SECURE PANIC BAR WITH TWO 1/4–20 (M6–1.0) x 1"(25.4) OVAL HD. M.S. (PHIL.)

DOGGING OF DEVICE WITH CYLINDER KEY

TO DOG DEVICE INSERT KEY, FULL DEPRESS PANIC BAR, HOLD DOWN & TURN KEY CLOCKWISE TO APPROX. TWO O' CLOCK. RETURN KEY TO CENTER FOR REMOVAL.

TO UNDOG TURN KEY COUNTERCLOCKWISE.

DOGGING DEVICE WITH DOGGING PIN

PUSH PANIC BAR DOWN AND HOLD. PUSH DOGGING PIN UP WITH SCREW DRIVER AND TURN 90° TO 180° EITHER DIRECTION, UNTIL DOGGING PIN RELEASES.

NOTE:
THIS PRODUCT IS DESIGNED AND MFRG. TO MEET CLASSIFICATION NO. 37601321A, EN1125 STANDARD.

BOLT ADJUSTMENT:

TO ADJUST TOP & BOTTOM BOLTS, ROTATE HEX. BOLT WITH WRENCH PROVIDED AS SHOWN.

PATENT NO 3,993,335

RECOMMENDATIONS FOR MAINTENANCE:

IT IS RECOMMENDED THAT THE FOLLOWING ROUTINE MAINTENANCE CHECKS SHOULD BE TAKEN AT INTERVALS OF NOT MORE THAN ONE MONTH BY THE OCCUPIER OR HIS APPROVED REPRESENTATIVE:

A) INSPECT AND OPERATE THE PANIC DEVICE TO ENSURE THAT ALL COMPONENTS ARE IN A SATISFACTORY WORKING CONDITION;

B) ENSURE THAT THE KEEPER(S) IS (ARE) FREE FROM OBSTRUCTION.

V 10.01.05 ADD NOTE: WHEN NOT USING MORTISE CYLINDER:		ECN1863	RM
U 5.26.05 CLASSIFICATION NO. WAS 36501321A	ECN1841		RM
T 4.25.05 REMOVE RETURN PORTION SHOWN ON TOP STRIKE		ECN1834	RM
R 12.23.02 INCORPORATE 11/32# HOLE FOR LOCK PAD		ECN1644	RM
P 02/03/00 ADD HUMP TYPE STRIKE	ECN1339		RM
N 2/27/98 ADD MAINT. INSTRUCTIONS ECN1143			RM
M 10/4/97 REDRAWN, ELIMINATE TOP & BTM HOLE FOR ADJUSTMENT (BOLT GUIDE) ECN1108			RM

DIMENSIONAL TOLERANCES UNLESS OTHERWISE SPECIFIED	APPROVALS	DATE
DECIMAL DIMENSIONS .XX ± .010	APPROVED	
DECIMAL DIMENSIONS .XXX ± .005	CHECKED	
ANGULAR ± ° FRACTIONAL ± 1/64	DRAWN RM	7/7/97

jackson CORPORATION
3447 UNION PACIFIC AVE.
LOS ANGELES, CALIF. 90023

FILE NO.	MATERIAL	SCALE NONE	INSTALLATION GUIDE 1085 & 1085x86 PANIC DEVICES
NEXT ASSY. 1085–KITS	FINISH		SHEET 1 OF 1 SHEETS
QTY. USED 1	HEAT TREAT		DWG. NO. 10–473 REV. V